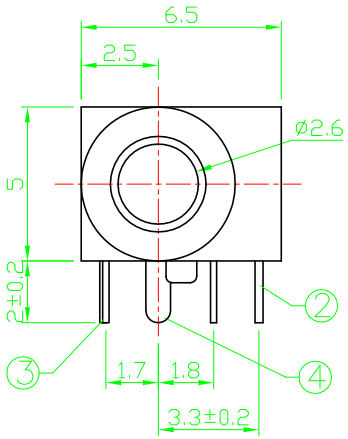

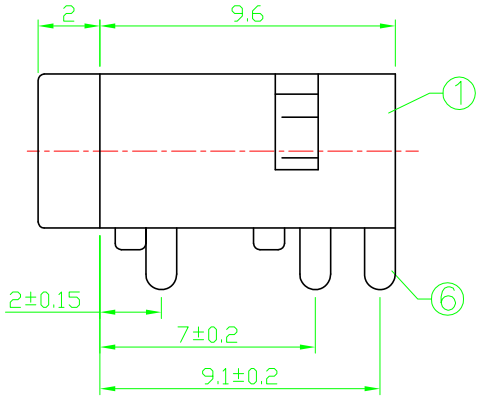

P.C.B LAYOUT
TOP VIEW

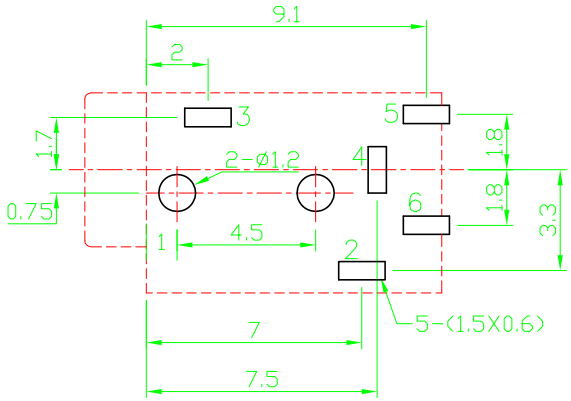

SCHEMATIC

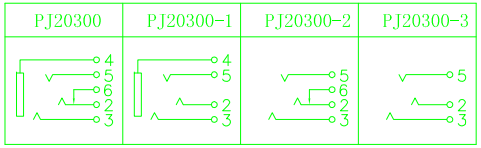

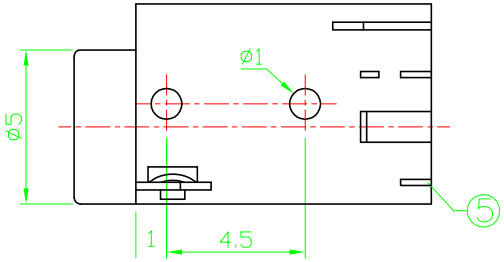

SPECIFICATION
1.Rating : DC 30V 0.5A
2.Contact resistance : ≦0.03Ω
3.Insulation resistance : ≧100MΩ (DC250V)
4.Withstand voltage : 500VAC
5.Insertion and extraction force : 3–20N
6.life test : 5,000 cycles

NO.	DESCRIPTION	QTY	MATERIAL	PLATING
6	FLAT PIECE	1	BRASS T=0.25	Ag–Plating
5	SPRING PIECE	1	SUS301 T=0.2	Ag–Plating
4	CONTACT FOOT	1	PHOSPHOR BRONZE T=0.2	Ag–Plating
3	CONTACT FOOT	1	PHOSPHOR BRONZE T=0.2	Ag–Plating
2	SPRING PIECE	1	PHOSPHOR BRONZE T=0.25	Ag–Plating
1	HOUSING	1	PBT	

UNLESS OTHERWISE SPECIFIED TOLERANCES ARE
.x ±0.30
.xx ±0.20
.xxx ±0.10
.x° ±3.0°
.xx° ±2.0°
.xxx° ±1.0°

UNIT: MM

TYPE: PHONE JACK

PJ20300–X

PAPER NO: A4

PAGE 1 OF 1

SCALE	VER
4:1	1

DESIGNER BY:
CHECK BY:
APPROVED BY:

丞永實業有限公司
BLUE SOURCES ELECTRONICS CO,LTD.